Accurate Lock and Hardware Co.

Manufactures of
Custom Locks and Architectural Hardware

Annie Place, Stamford, CT. 06902
(203) 348-8865 FAX (203) 348-5234
E-MAIL: Sales@Accuratelockandhardware.com
www.Accuratelockandhardware.com

9100 Series

Mortise Lock Installation Template
All BackSets

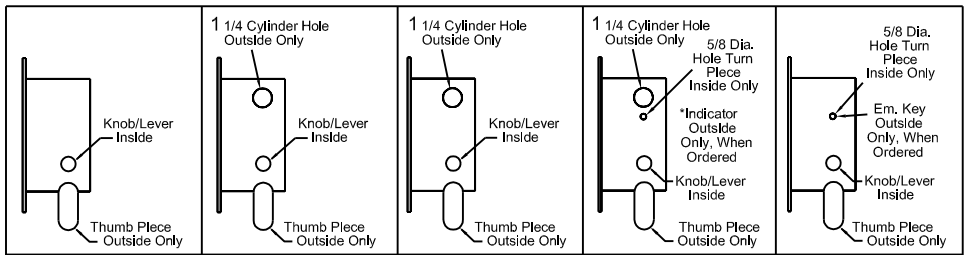

FIG. 2		FIG. 3		FIG. 4		FIG. 5		FIG. 6	
9125		9145		9122		9124		9139	
		9156		9142		9134			
		9159				9148			
						9167			

Find Catalog Numbers Which Will Show Cutouts For Functions Desired. Refer To Composite Template Above For Locations And Sizes Of Holes.

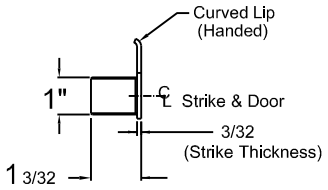

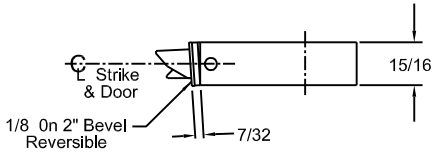

Insert BackSet As Req'd.
2-1/2", 2-3/4", 3-3/4"
5" or 6"

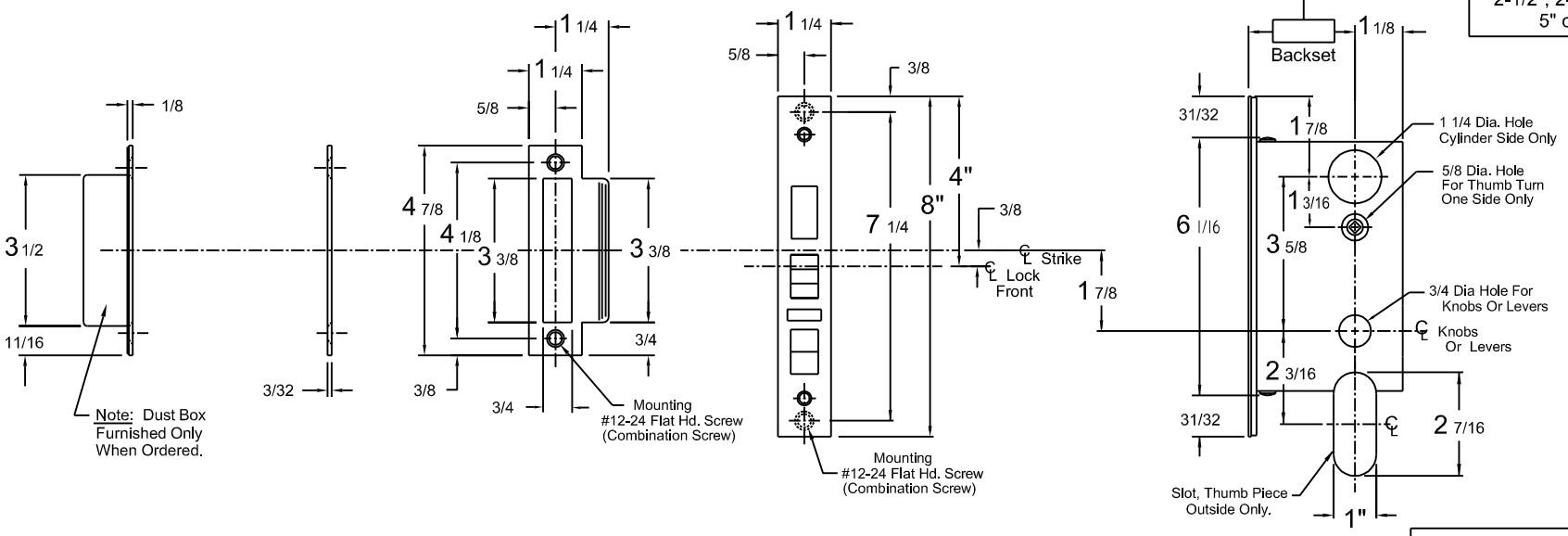

CAUTION
THUMB PIECE HOLE
Adjust Dimensions To Agree With Trim Being Used.

THUMB PIECE x KNOB / LEVER

9100 SERIES

Responsibilty
Door And Frame Manufactures Are Responsible For Providing Adequate Construction Or Re-Inforcement For Proper Installation Of Hardware Shown.

DWG. NO.	REV
9100TPxL-TEMP	11/9/08

FILE NAME: F:\JERRY08\ACCURATE\9100\9100-BLANKTEMP