Accurate Lock and Hardware Co.

Manufacturers of
Custom Locks and Architectural Hardware

Annie Place, Stamford, CT. 06902
(203) 348-8865 FAX (203) 348-5234
E-MAIL: Sales@Accuratelockandhardware.com
www.Accuratelockandhardware.com

8500- 2" Backset

Mortise Lock Installation Template

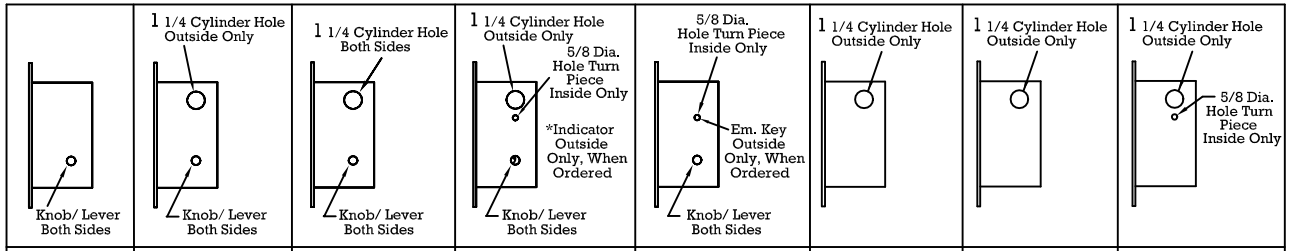

FIG. 2	FIG. 3	FIG. 4	FIG. 5	FIG. 6	FIG. 7	FIG. 8	FIG. 9
8525	8556	8522	8524	8539	8501	8502	8503
	8559		8548				

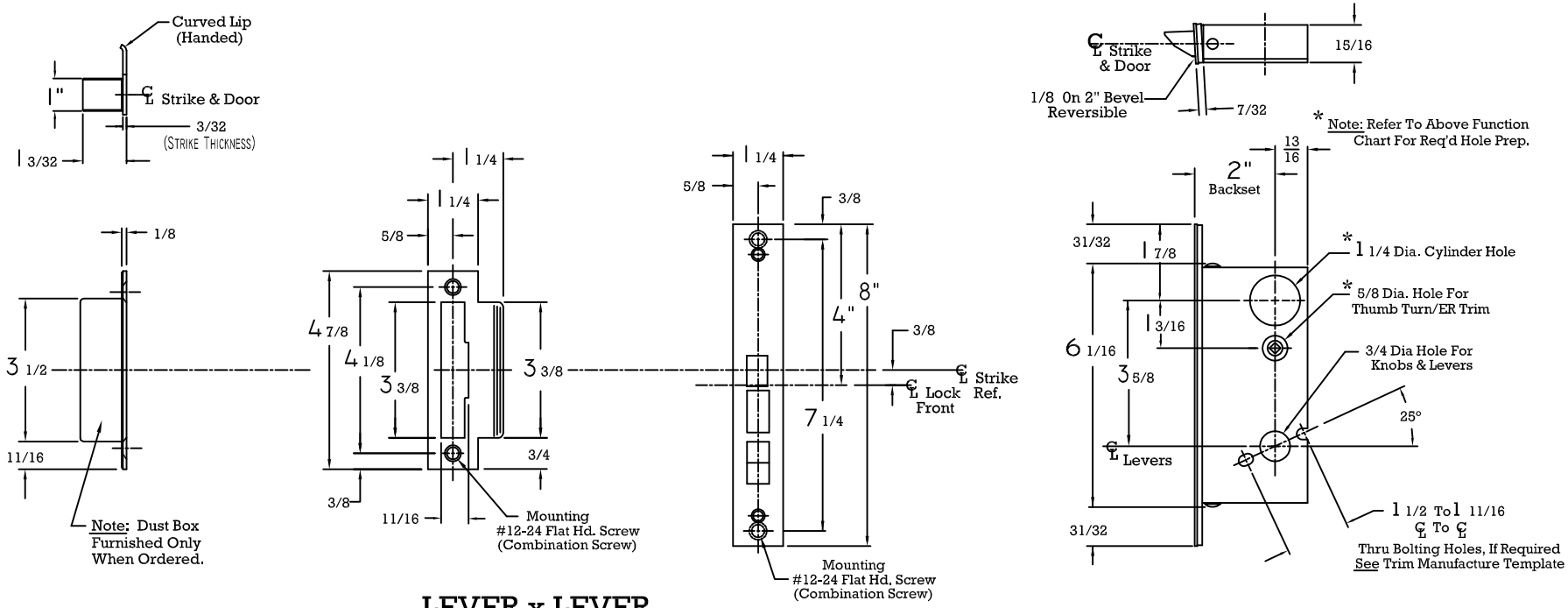

LEVER x LEVER

8500 SERIES

2" BACKSET

Responsibilty
Door And Frame Manufactures Are Responsible For Providing Adequate Construction Or Re-Inforcement For Proper Installation Of Hardware Shown.

DWG. NO.	REV
8500-2000TEMP	10/6/08

FILE NAME: F:\JERRY08\ACCURATE\8600\8500-TEMPLATES
F:/WEBFILES/TEMPLATES/8600/8500LxL-2000TEMP